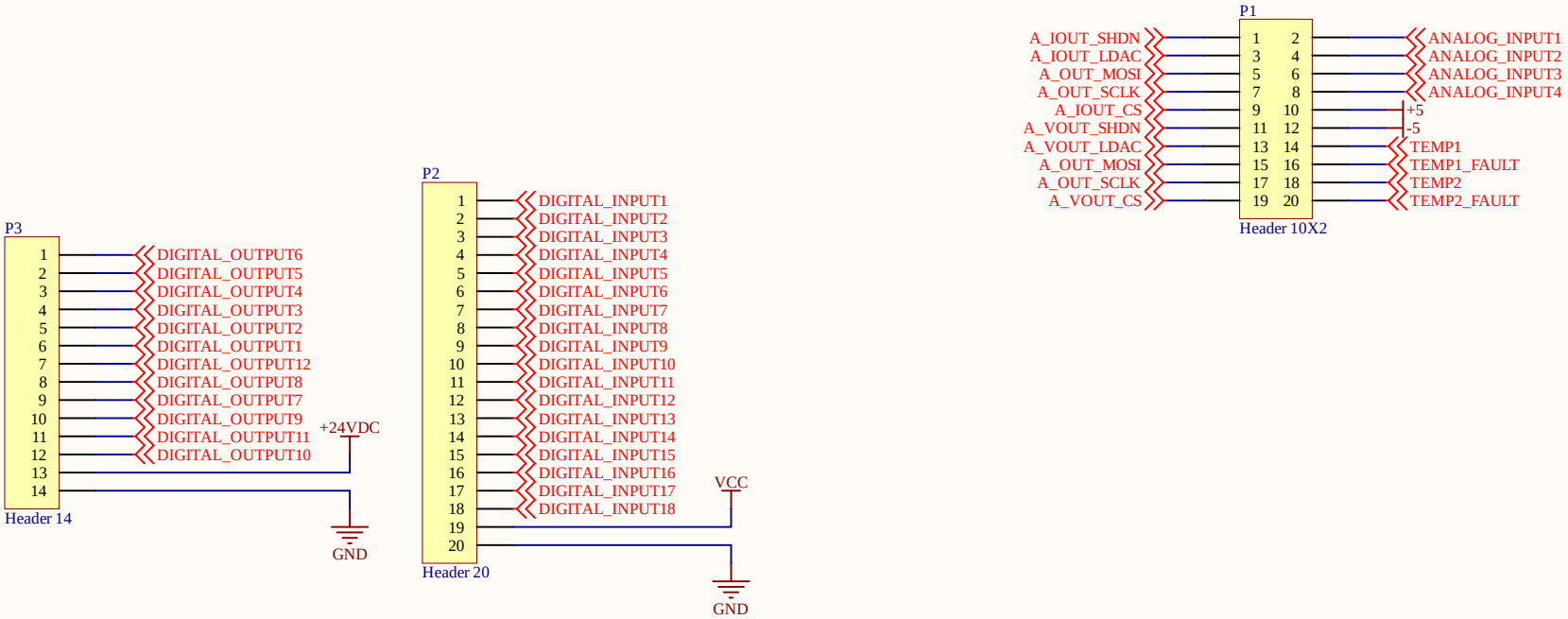

Title		
Size A4	Number	Revision
Date: 11/17/2025	Sheet of	
File: D:\Thinglista\..\Communication_with_IO.SchDoc	Drawn By:	

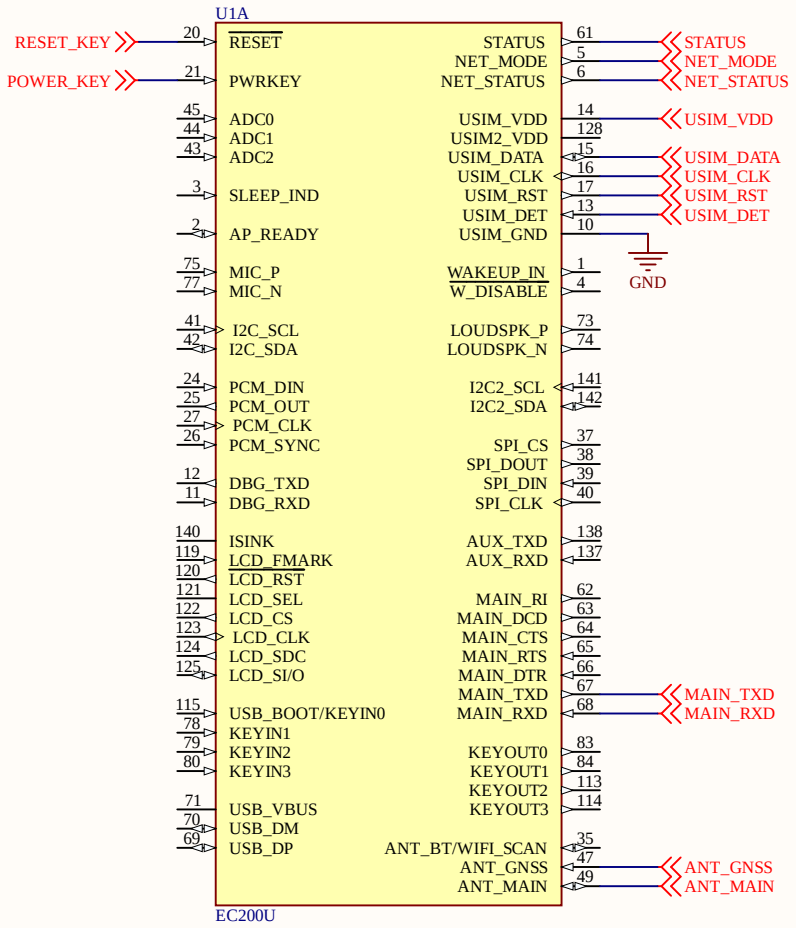

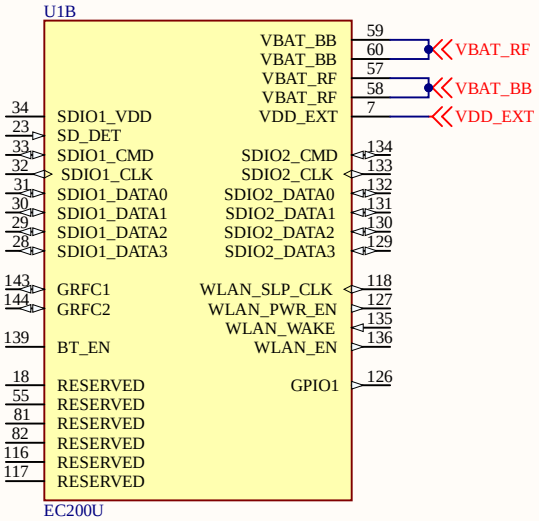

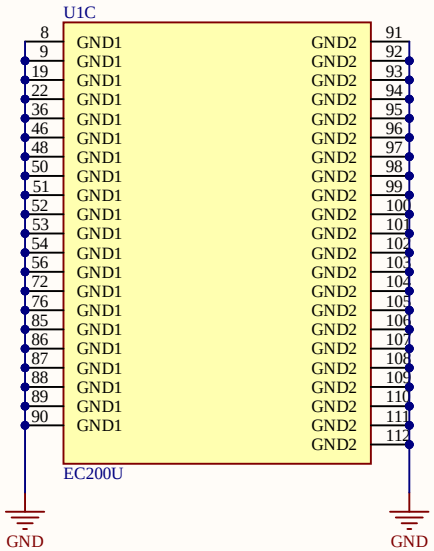

Title: **IoT_Gateway**			
Page Contents: GSM.SchDoc			*Thingslista Automation LLp* *410, Ridham Plaza* *Near Amar Javan Circle* *Nikol, Ahmedabad* *Gujarat, 382450*
Drawn By: Parth Patel	Checked By: Parth Patel		
Size: A4	Last_Modify 11/15/2025	Revision: V1.0.0	
Date: 11/17/2025	Time: 6:38:02 PM	Sheet 2 of 9	
File: D:\Thinglista\Universal_PLC\Controller\Controller Card\GSM.SchDoc			

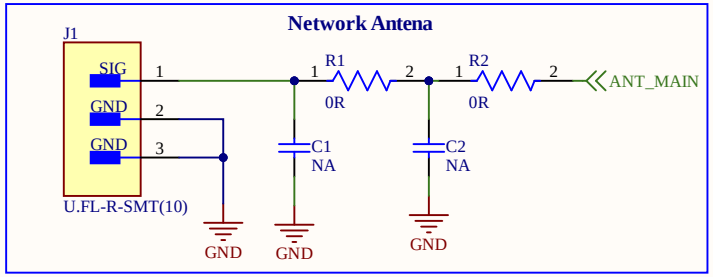

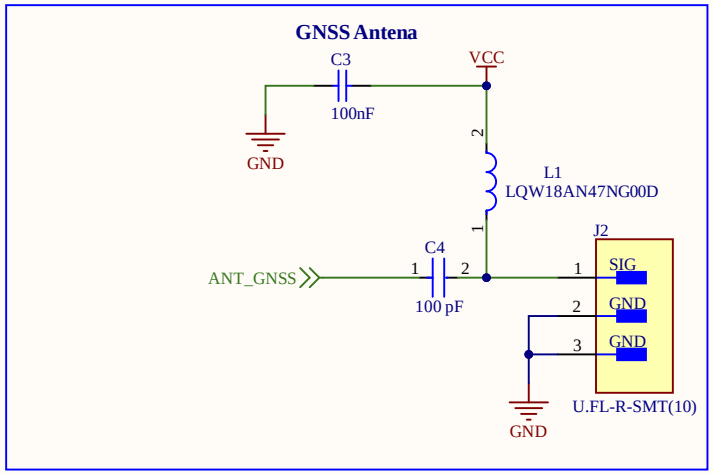

Title: **Title**			
Page Contents: ANT.SchDoc			*Thingslista Automation LLp* *410, Ridham Plaza* *Near Amar Javan Circle* *Nikol, Ahmedabad* *Gujarat, 382450*
Drawn By: Name		Checked By: None	
Size: A4	Last_Modify 11/15/2025	Revision:	
Date: 11/17/2025	Time: 6:38:03 PM	Sheet 3 of 9	
File: D:\Thinglista\Universal_PLC\Controller\Controller Card\ANT.SchDoc			

Indicate the Network Activity

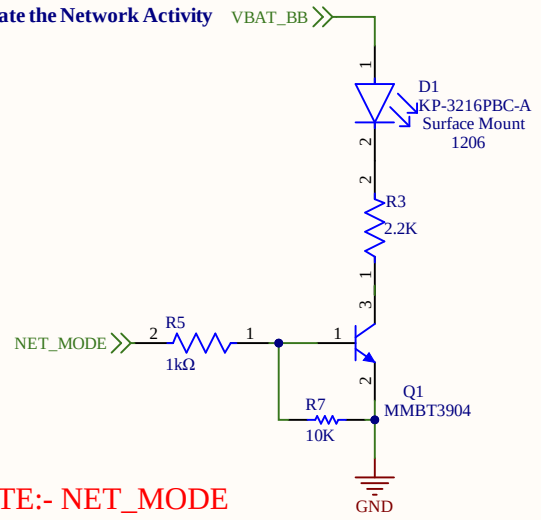

NOTE:- NET_MODE
Flicker slowly (200 ms high/1800 ms low) Network searching
Flicker quickly (234 ms high/266 ms low) Idle
Flicker rapidly (62 ms high/63 ms low) Data transfer is ongoing
Always high Voice calling

Indicate the Network Registration

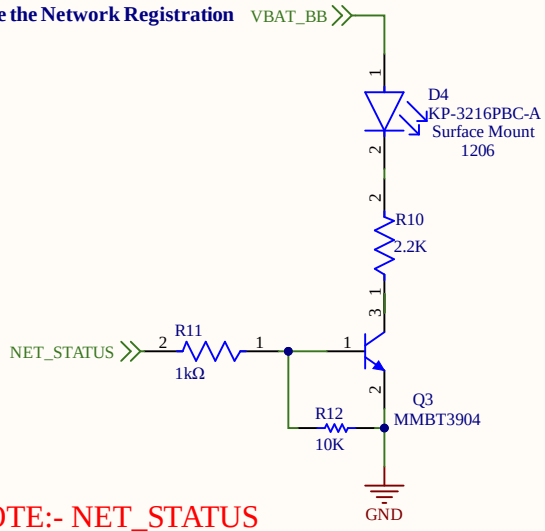

NOTE:- NET_STATUS
Always high Registered on LTE network
Always low finding network

Indicate the Module Power on

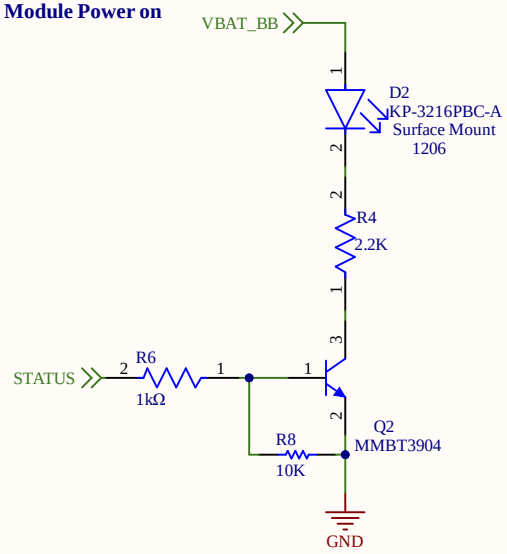

GSM Power on

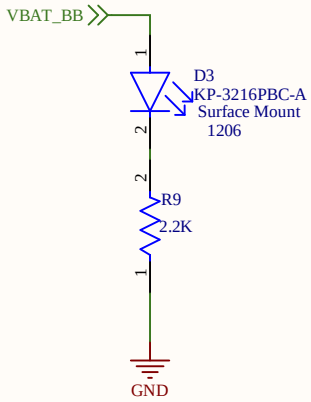

Title: **Title**			
Page Contents: GSM_INDICATION.SchDoc			*Thingslista Automation LLp* *410, Ridham Plaza* *Near Amar Javan Circle* *Nikol, Ahmedabad* *Gujarat, 382450*
Drawn By: Name	Checked By: None		
Size: A4	Last_Modify 11/17/2025	Revision:	
Date: 11/17/2025	Time: 6:38:03 PM	Sheet 4 of 9	
File: D:\Thinglista\Universal_PLC\Controller\Controller Card\GSM_INDICATION.SchDoc			

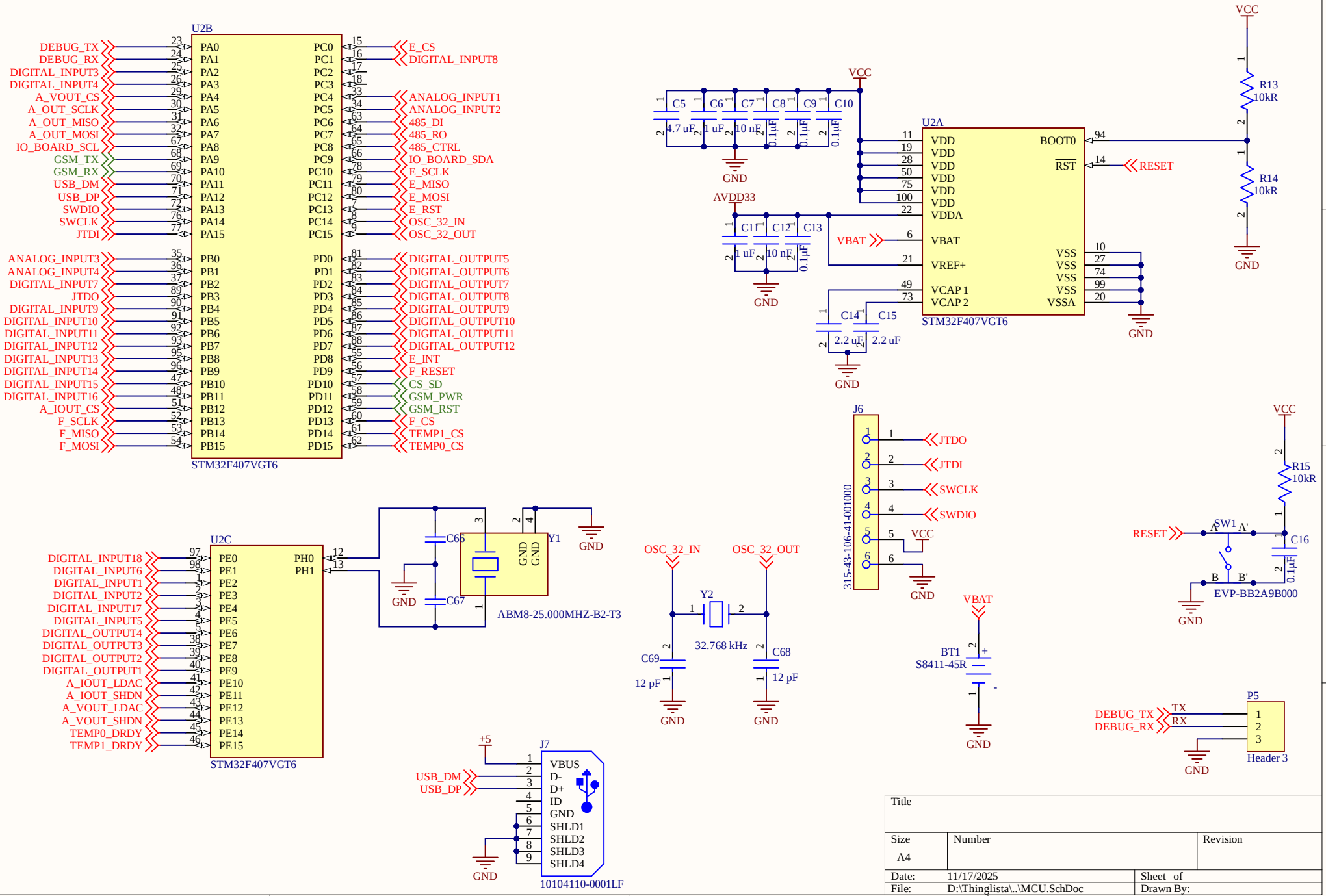
U2B
STM32F407VGT6
DEBUG_TX
DEBUG_RX
DIGITAL_INPUT3
DIGITAL_INPUT4
A_VOUT_CS
A_OUT_SCLK
A_OUT_MISO
A_OUT_MOSI
IO_BOARD_SCL
GSM_TX
GSM_RX
USB_DM
USB_DP
SWDIO
SWCLK
JTDI
ANALOG_INPUT3
ANALOG_INPUT4
DIGITAL_INPUT7
JTDO
DIGITAL_INPUT9
DIGITAL_INPUT10
DIGITAL_INPUT11
DIGITAL_INPUT12
DIGITAL_INPUT13
DIGITAL_INPUT14
DIGITAL_INPUT15
DIGITAL_INPUT16
A_IOUT_CS
F_SCLK
F_MISO
F_MOSI
E_CS
DIGITAL_INPUT8
ANALOG_INPUT1
ANALOG_INPUT2
485_DI
485_RO
485_CTRL
IO_BOARD_SDA
E_SCLK
E_MISO
E_MOSI
E_RST
OSC_32_IN
OSC_32_OUT
DIGITAL_OUTPUT5
DIGITAL_OUTPUT6
DIGITAL_OUTPUT7
DIGITAL_OUTPUT8
DIGITAL_OUTPUT9
DIGITAL_OUTPUT10
DIGITAL_OUTPUT11
DIGITAL_OUTPUT12
E_INT
F_RESET
CS_SD
GSM_PWR
GSM_RST
F_CS
TEMP1_CS
TEMP0_CS
U2A
STM32F407VGT6
VDD
VDDA
VBAT
VREF+
VCAP 1
VCAP 2
BOOT0
RST
VSS
VSSA
RESET
VCC
AVDD33
C5
C6
C7
C8
C9
C10
C11
C12
C13
C14
C15
4.7 uF
1 uF
10 nF
0.1µF
2.2 uF
GND
R13
10kR
R14
10kR
R15
10kR
C16
SW1
EVP-BB2A9B000
J6
315-43-106-41-001000
JTDO
JTDI
SWCLK
SWDIO
U2C
STM32F407VGT6
DIGITAL_INPUT18
DIGITAL_INPUT6
DIGITAL_INPUT1
DIGITAL_INPUT2
DIGITAL_INPUT17
DIGITAL_INPUT5
DIGITAL_OUTPUT4
DIGITAL_OUTPUT3
DIGITAL_OUTPUT2
DIGITAL_OUTPUT1
A_IOUT_LDAC
A_IOUT_SHDN
A_VOUT_LDAC
A_VOUT_SHDN
TEMP0_DRDY
TEMP1_DRDY
PH0
PH1
C66
C67
Y1
ABM8-25.000MHZ-B2-T3
OSC_32_IN
OSC_32_OUT
Y2
32.768 kHz
C68
C69
12 pF
BT1
S8411-45R
P5
Header 3
J7
10104110-0001LF
+5
USB_DM
USB_DP
VBUS
D-
D+
ID
GND
SHLD1
SHLD2
SHLD3
SHLD4
Title
Size
A4
Number
Revision
Date: 11/17/2025
File: D:\Thinglista\..\MCU.SchDoc
Sheet of
Drawn By:

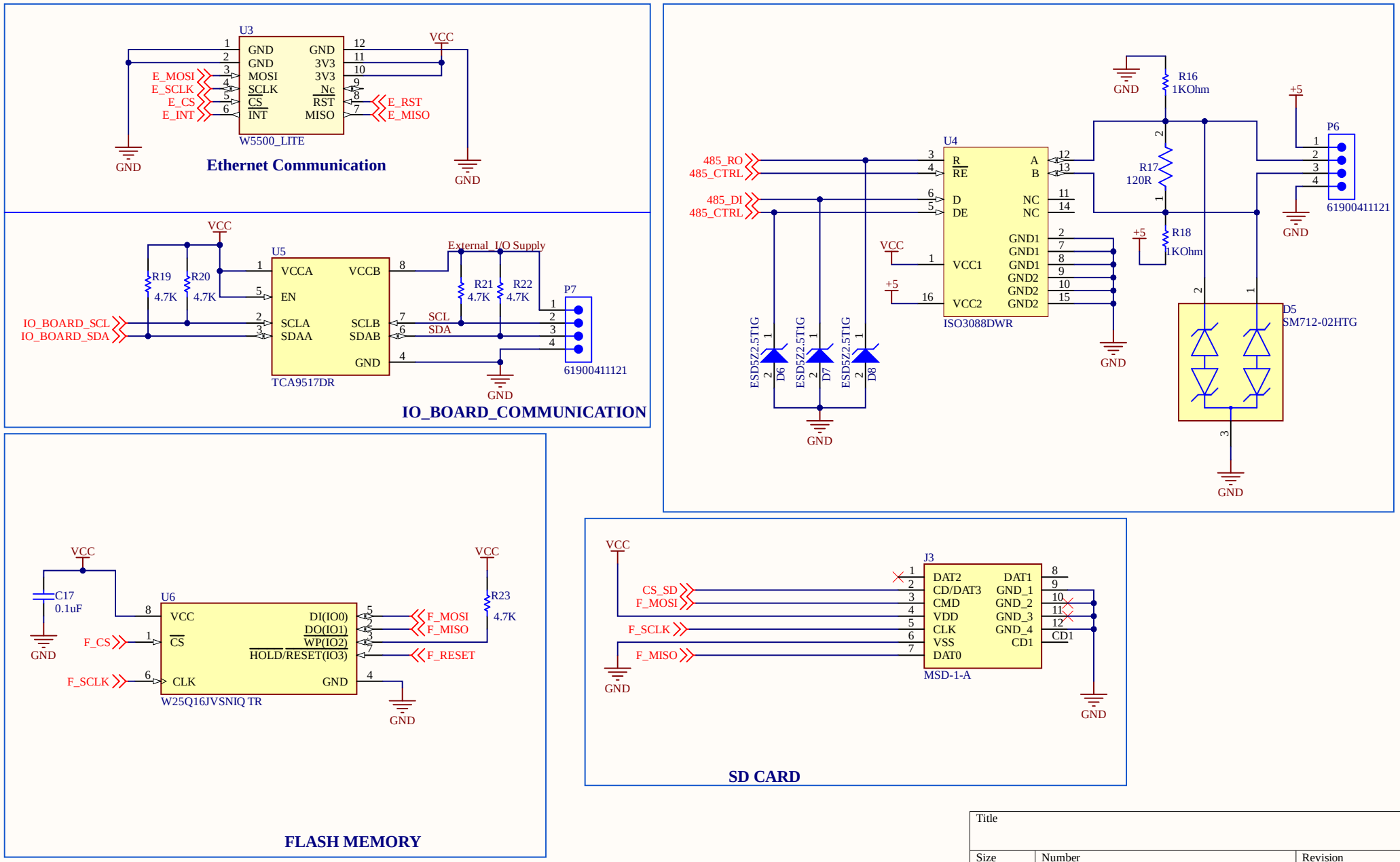

Title		
Size A4	Number	Revision
Date: 11/17/2025		Sheet of
File: D:\Thinglista\..\Peripherals.SchDoc		Drawn By:

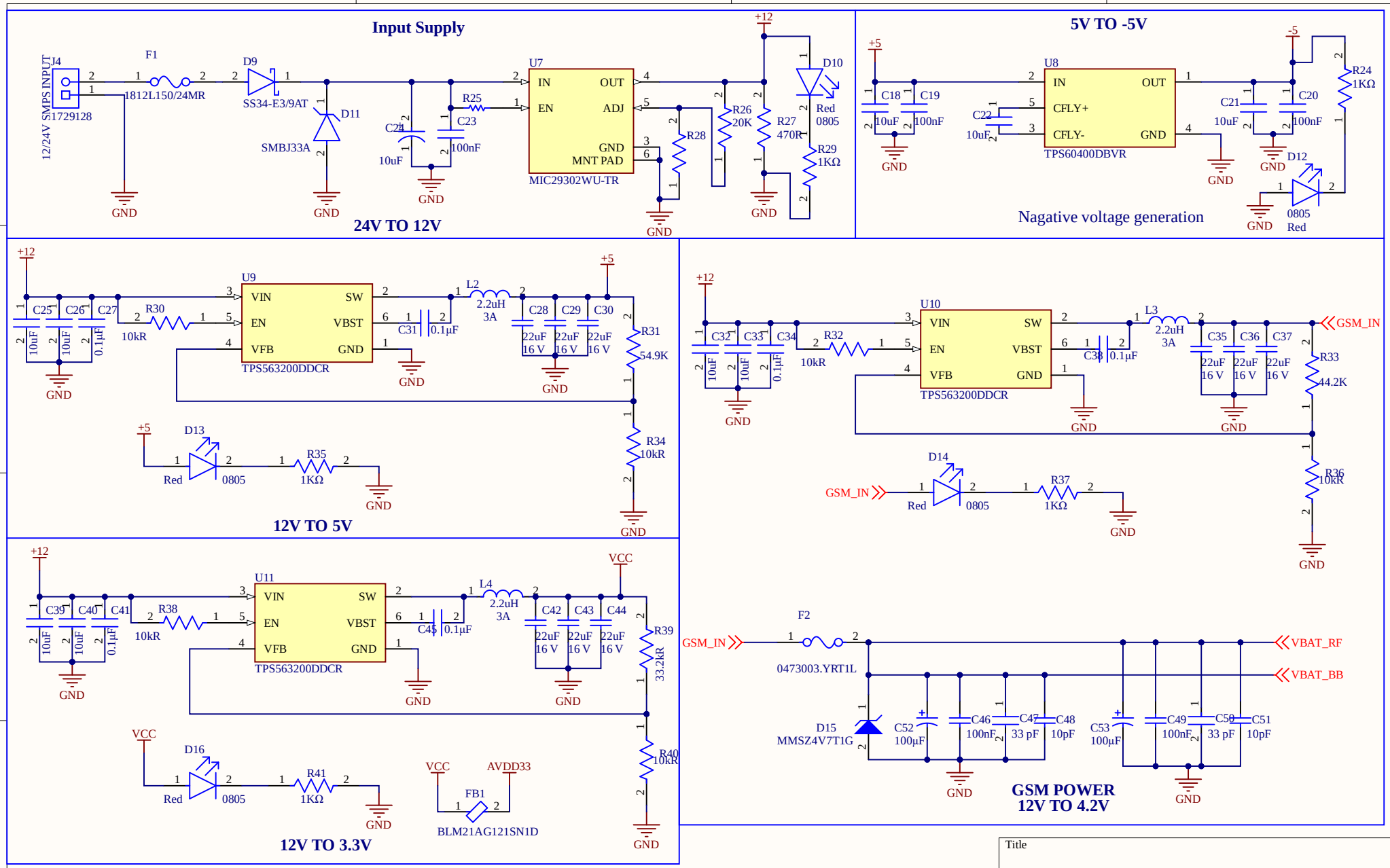

Title		
Size A4	Number	Revision
Date: 11/17/2025		Sheet of
File: D:\Thinglista\..\Power_supply.SchDoc		Drawn By:

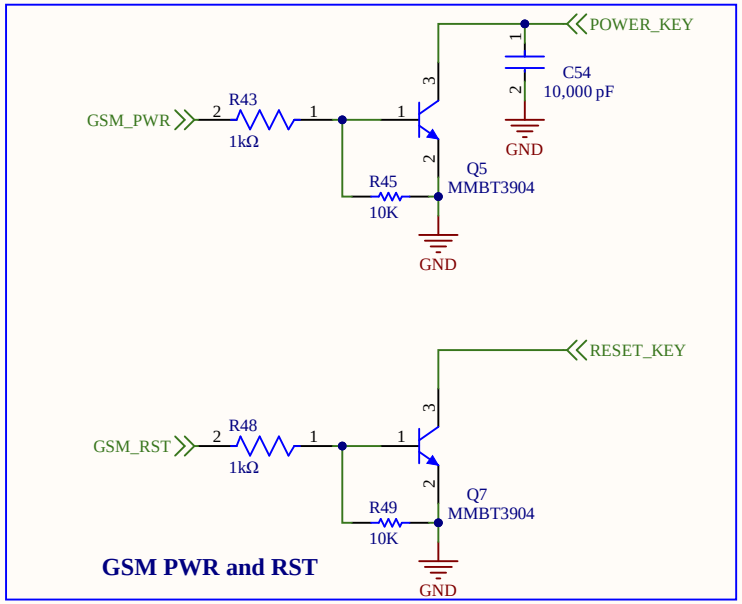

GSM PWR and RST

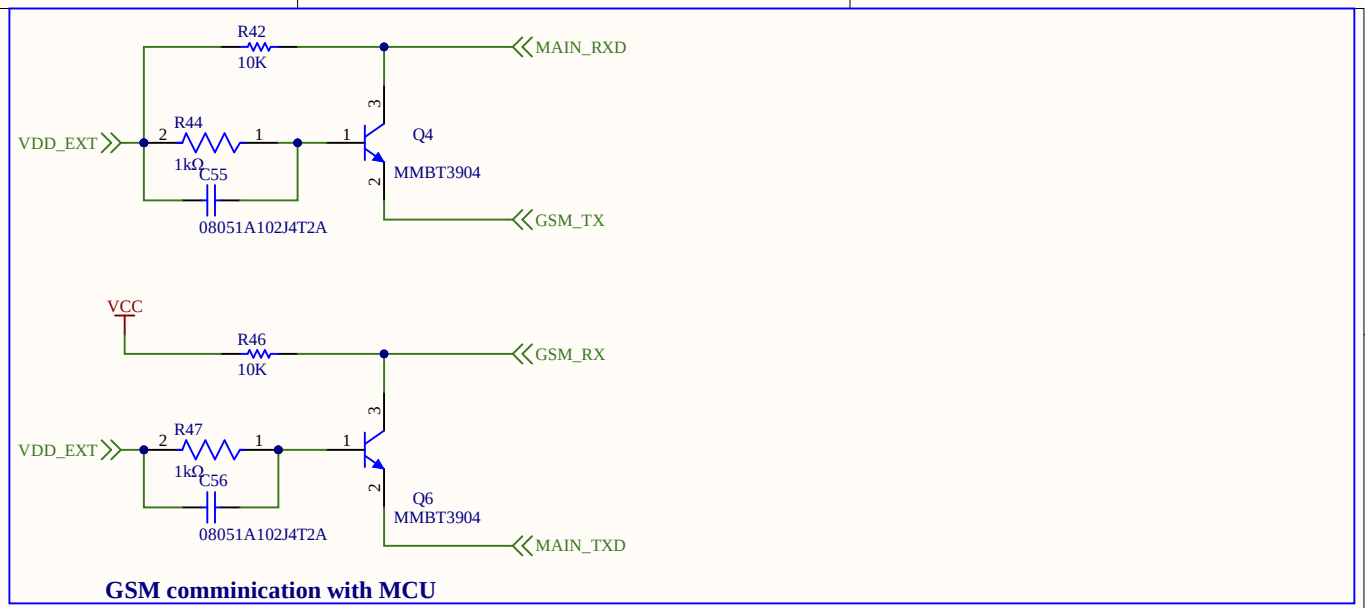

GSM comminication with MCU

SIM Card

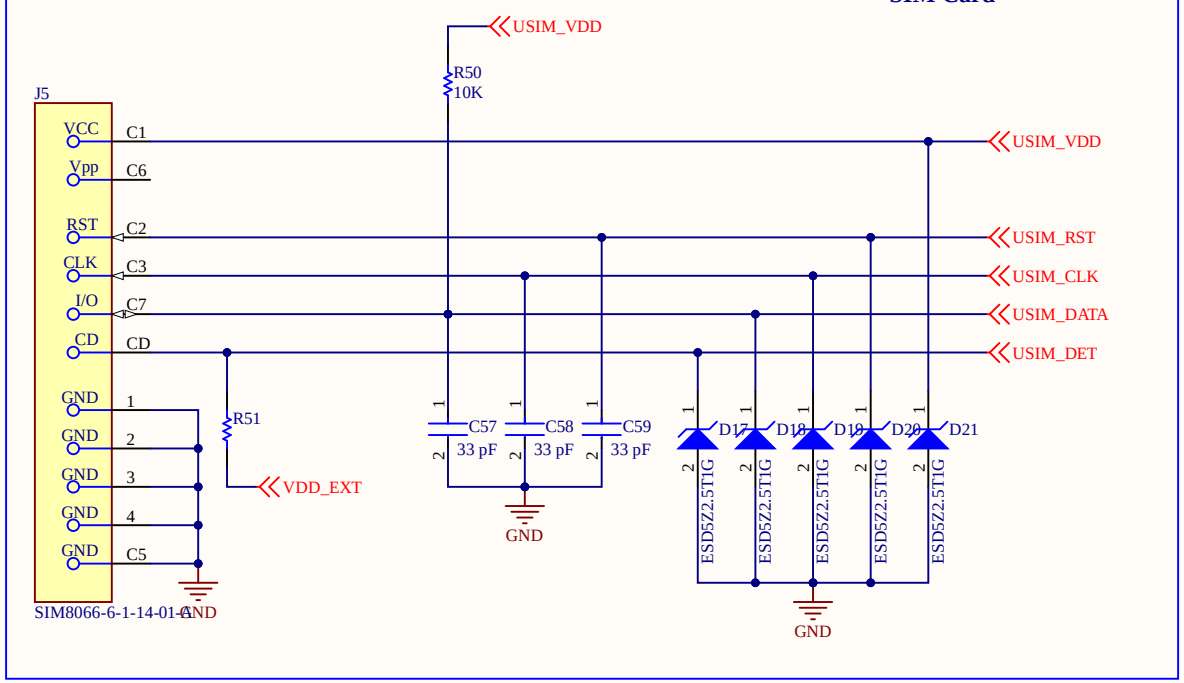

Title: **Title**			
Page Contents: SIM CARD.SchDoc			*Thingslista Automation LLp* *410, Ridham Plaza* *Near Amar Javan Circle* *Nikol, Ahmedabad* *Gujarat, 382450*
Drawn By: Name		Checked By: None	
Size: A4	Last_Modify 11/15/2025	Revision:	
Date: 11/17/2025	Time: 6:38:04 PM	Sheet 8 of 9	
File: D:\Thinglista\Universal_PLC\Controller\Controller Card\SIM CARD.SchDoc			

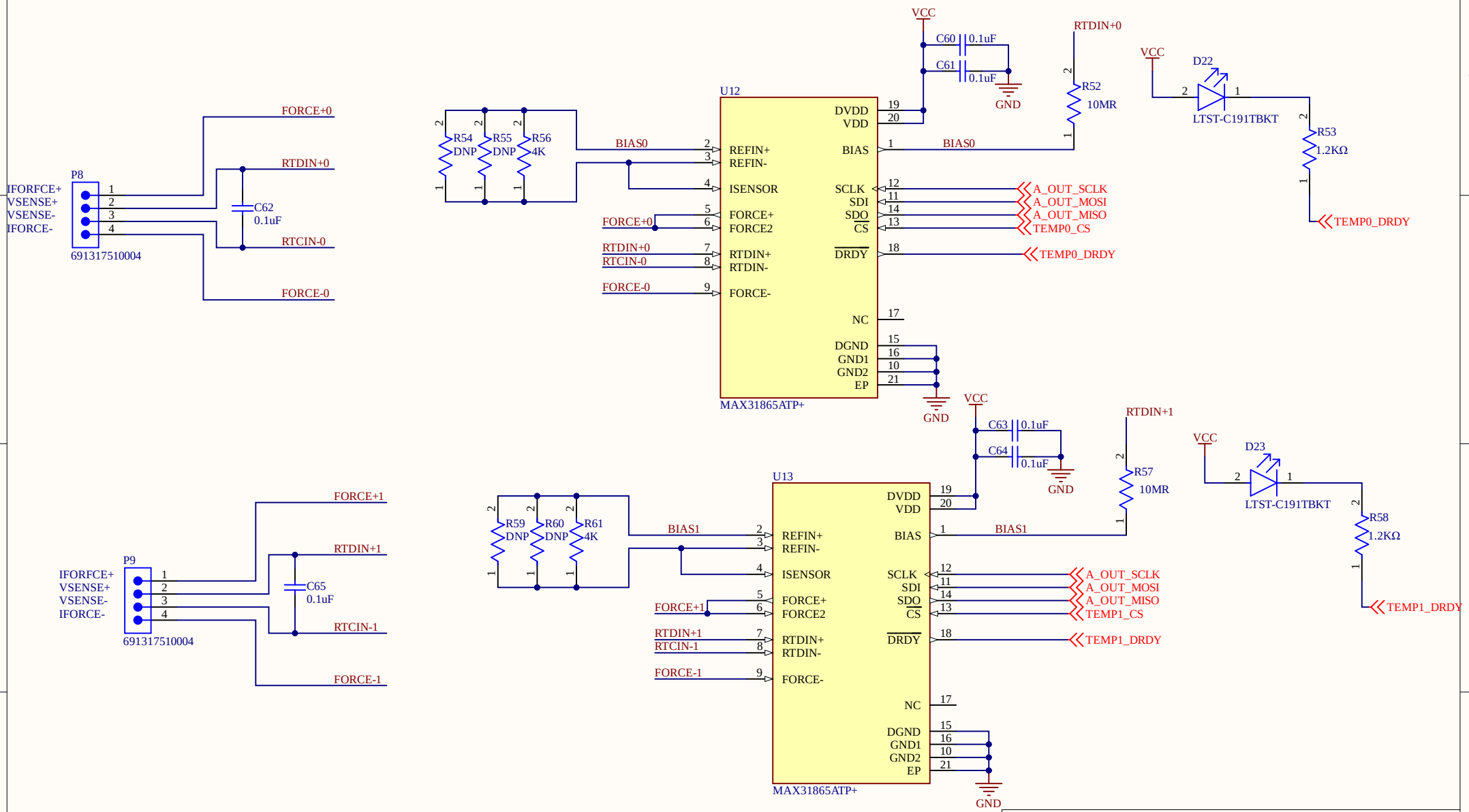

Title		
Size A4	Number	Revision
Date: 11/17/2025	Sheet of	
File: C:\Users\parth\Downloads\TEMP.SchDoc	Drawn By:	